No.	Changes and/or Note No.	Date	Sign	No.	Changes and/or Note No.	Date	Sign

Standard Kit:

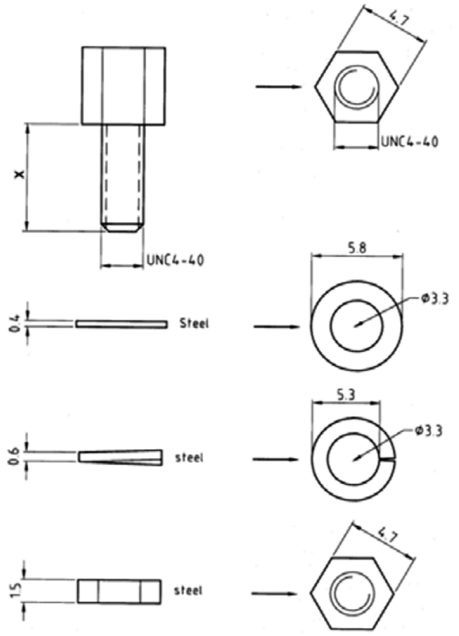

Part No:	(x) mm	Packaging:
2750-0111-01	5,0	Kitted (Pair)
2750-0111-02	7,0	
2750-0111-03	8,0	
2750-0111-04	10,0	
2750-0111-05	14,0	
2750-0111-06	6,0	
2750-0111-07	12,0	
2751-0111-01	5,0	Bulk
2751-0111-02	7,0	
2751-0111-03	8,0	
2751-0111-04	10,0	
2751-0111-05	14,0	
2751-0111-06	6,0	
2751-0111-07	12,0	

Modified Kit:

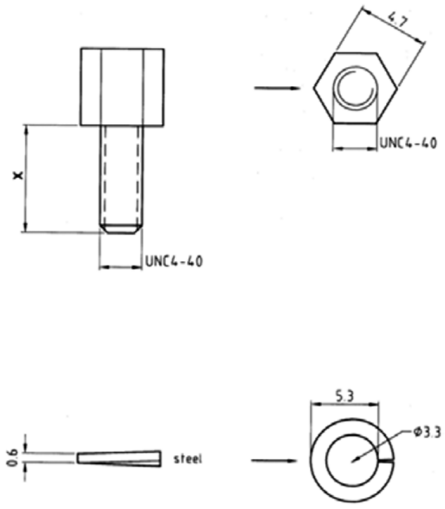

Part No:	(x) mm	Packaging:
2750-0111-01E	5,0	Kitted (Pair)
2750-0111-02E	7,0	
2750-0111-03E	8,0	
2750-0111-04E	10,0	
2750-0111-05E	14,0	
2750-0111-06E	6,0	
2750-0111-07E	12,0	
2751-0111-01E	5,0	Bulk
2751-0111-02E	7,0	
2751-0111-03E	8,0	
2751-0111-04E	10,0	
2751-0111-05E	14,0	
2751-0111-06E	6,0	
2751-0111-07E	12,0	

DATE	DRAWN	SCALE	MATERIAL TYPE
2004-08-12	MRR		
	APPROVED		REPLACES

encitech connectors AB

DJF - Female Screw Locks
UNC 4-40 Thread

DRAWING No. 275X-0111