No.	Changes and/or Note No.	Date	Intr	No	Changes and/or Note No.	Date	Intr

Revision
3

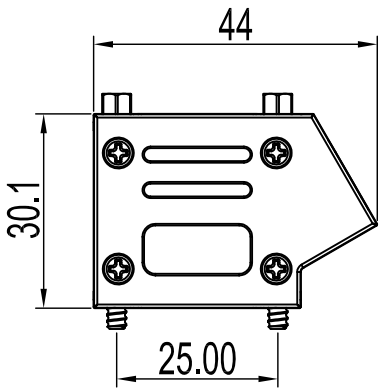

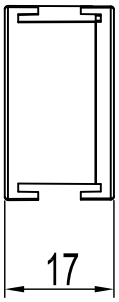

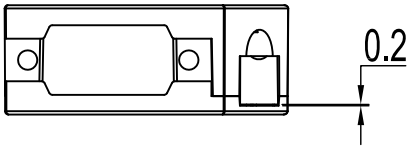

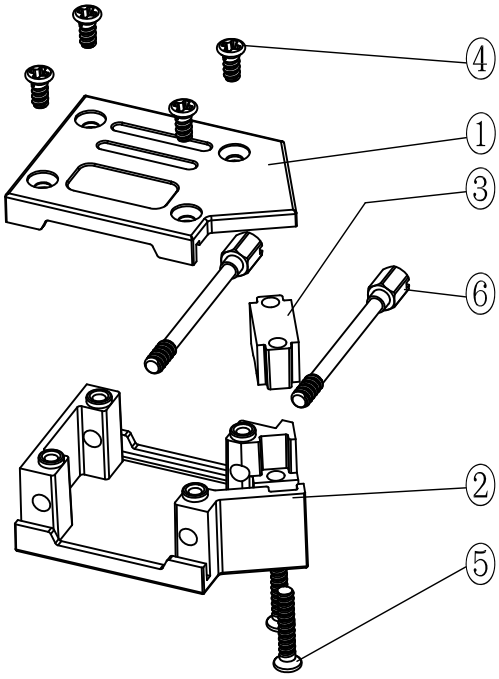

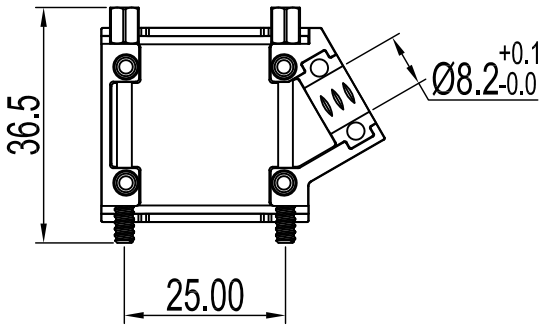

Part Number:	Description:	Pack:	Item	QTY	Part description
			1	1	DAK09DC Upper Hood
6570-0205-01	DVZA09-DC Hoods w/Nickel plated-Kit	Kit	2	1	DAK09DC Lower Hood
			3	2	DAK09DC Clamp 7.5mm
			4	4	M2.5x6 Countersunk screw
6571-0205-01	DVZA09-DC Hoods w/Nickel plated-Bulk	Bulk	5	2	M2.5x14 Countersunk screw
			6	2	UNC 4-40X36.5 Jackscrew

DATE:	DRAWN:	SCALE:	MATERIAL TYPE:	GENERAL TOLERANCES UNILESS OTHERWISE STATED LINEAR 0 ±0.20 0.0 ±0.15 0.00 ±0.10 ANGULAR ±0°30' ALL DIMEMSIONS IN mm THIRD ANGLE PROJECTION
2012-11-08	YGY			
	APPROVED: MRR		REPLACES:	

encitech connectors AB

DVZA09-DC Series

DRAWING No: 6688-9639